Tolerances
1-20=+/-0.2
20-30=+/-0.3
30-40=+/-0.4
40-50=+/-0.5
50-100=+/-0.75
100-300=+/-1.5
Angles=+/-1
Dimensions are In Millimeters

Revisions Description/Approved/Date	Approved	Date
	M.H.	11/03/01
	Checked M.H.	Date 11/03/01
	Drawn K.R.E.	Date 11/03/01

NOTES (plating thickness in micro-inches):
1. Per QQ-B-626
2. Per QQ-S-764
3. Per QQ-C-530
4. Per QQ-B-750
5. Per MIL-P-19468
6. Per ZZ-R-765
7. Per WW-T-799
8. Gold pl. 5 min. over nickel pl. 50 min. over copper strike
9. Nickel pl. 100 min. over copper strike
10. Per QQ-P-35
11. Gold pl. 30 min. over nickel pl. 50 min. over copper strike

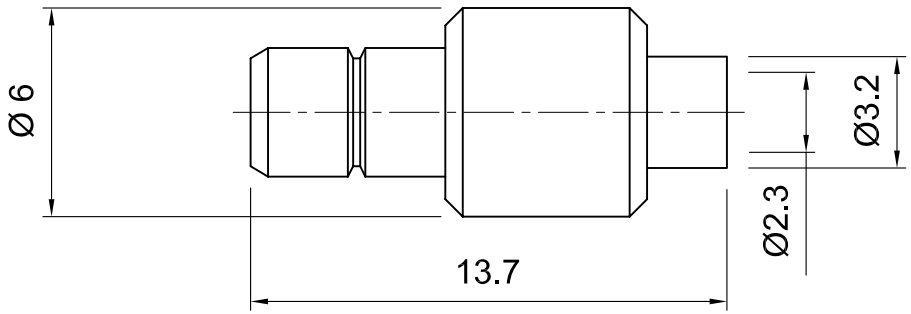

ITEM	MATERIAL	FINISH
Connector Body	Brass, Note 1	Gold, Note 8
Center Contact: M	Brass, Note 1	Gold, Note 11
Insulation	Teflon, Note 5	None
Ferrule	--	--
Gasket	--	--
Hex Nut	--	--
Lock Washer	--	--

Lighthorse Technologies, Inc.
5640 Kearny Mesa Rd. Suite N
San Diego, California 92111

Part Number: *LTI-SBSF31GT-086*

Description
SMB Jack for Semi Rigid 0.086" Cable

Gold plated Brass, Teflon dielectric

Scale	Drawing No.	File Name
1:1	SBSF31GT-086	SBSF31GT-086