Tolerances
1-20=+/-0.2
20-30=+/-0.3
30-40=+/-0.4
40-50=+/-0.5
50-100=+/-0.75
100-300=+/-1.5
Angles=+/-1
Dimensions are in Millimeters

Revisions Description/Approved/Date	Approved M.H.	Date
	Checked M.H.	Date
	Drawn T.J.A.	Date

NOTES (plating thickness in micro-inches):
1. Per QQ-B-626
2. Per QQ-S-764
3. Per QQ-C-530
4. Per QQ-B-750
5. Per MIL-P-19468
6. Per ZZ-R-765
7. Per WW-T-799
8. Gold pl. 5 min. over nickel pl. 50 min. over copper strike
9. Nickel pl. 100 min. over copper strike
10. Per QQ-P-35
11. Gold pl. 3 min. over nickel pl. 50 min. over copper strike

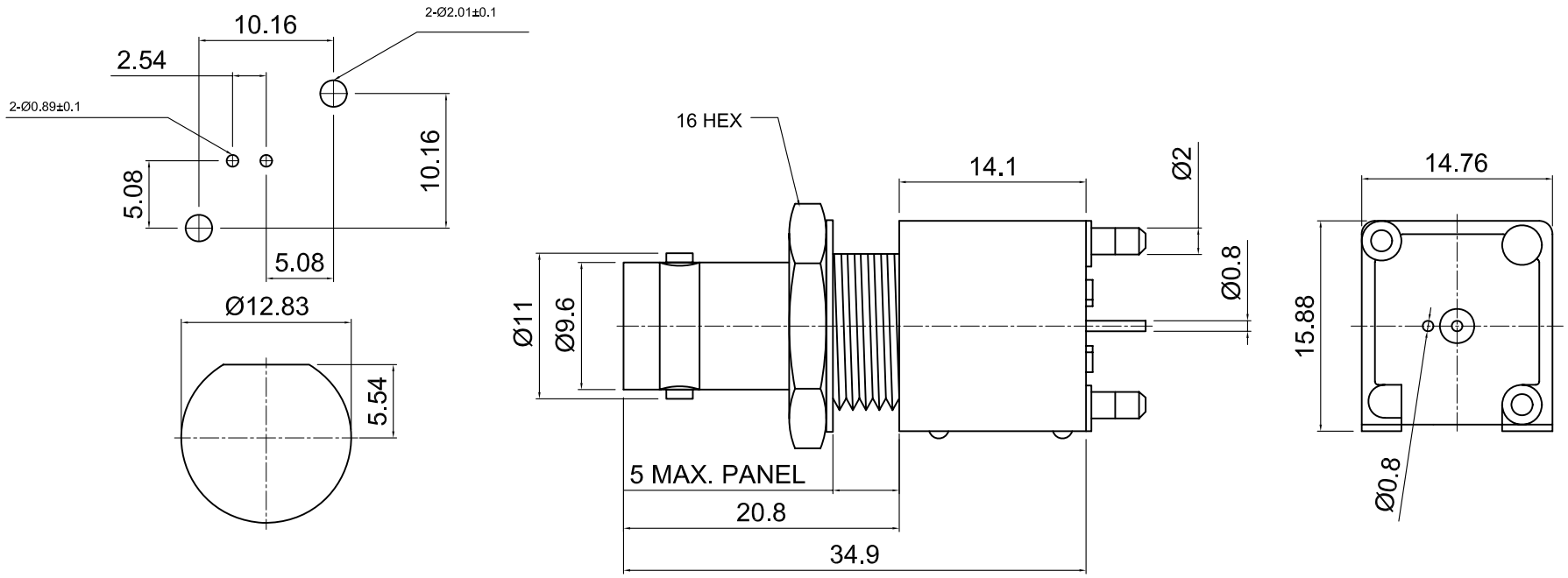

ITEM	MATERIAL	FINISH
Connector Body	Zinc Alloy	Nickel, Note 9
Center Contact: Female	P. Bronze	Gold, Note 11
Insulation	Polypropylene	None
Ferrule	--	--
Gasket	--	None
Hex Nut	Brass, Note 1	Nickel, Note 9
Lock Washer	Brass	Nickel, Note 9

Lighthorse Technologies, Inc.
4907 Morena Boulevard, #1411
San Diego, California 92117

Part Number: *LTI-BSF54HNPM*

Description
BNC PCB vertical thru hole jack. Nickel plated zinc alloy casing.

Polypropelyne dielectric. 50 Ohm part.

Scale	Drawing No.	File Name
2:1	BSF54HNPM	BSF54HNPM